riscogroup.com

RISCO GROUP

EN GSM 2G, 3G & 4G Plug-In Module Assembly Instructions for Agility, LightSYS & ProSYS Plus

IT Istruzioni di montaggio moduli ad innesto GSM 2G, 3G & 4G per Agility, LightSYS & ProSYS Plus

ES Montaje del módulos insertables 2G, 3G & 4G GSM para Agility, LightSYS & ProSYS Plus

FR Guide d'assemblage du module intégrable GSM 2G, 3G & 4G pour Agility, LightSYS & ProSYS Plus

PR Montagem do módulo GSM 2G, 3G & 4G da Agility, LightSYS & ProSYS Plus

NL GSM 2G, 3G & 4G installatiehandleiding voor Agility, LightSYS & ProSYS Plus

Model/Modello/ Modelo: RP512G2, RP512G3, RP512G4

Agility

Step 1

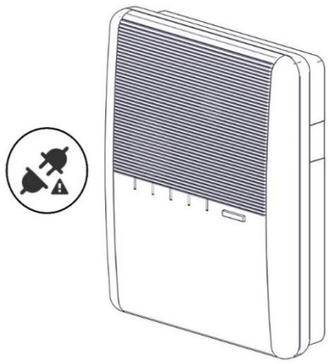

Step 2

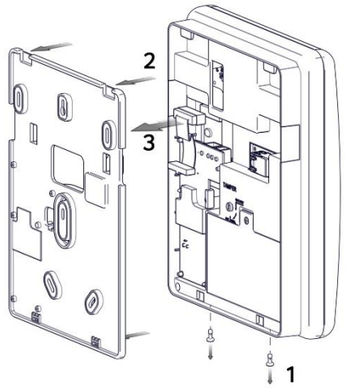

Step 3

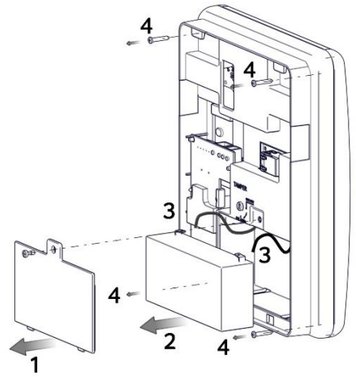

Step 4

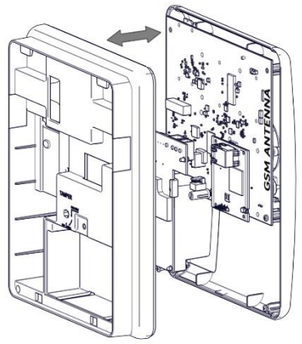

Step 5a

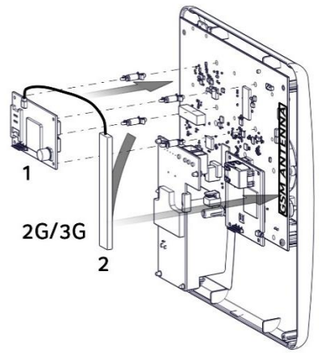

Step 5a

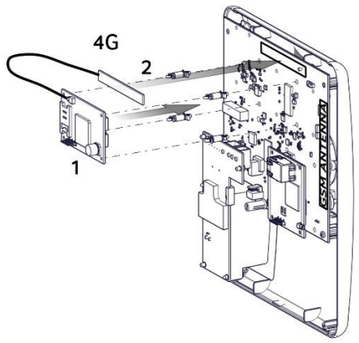

OR

Step 5b

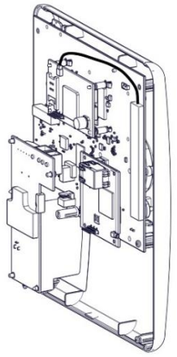

Step 6

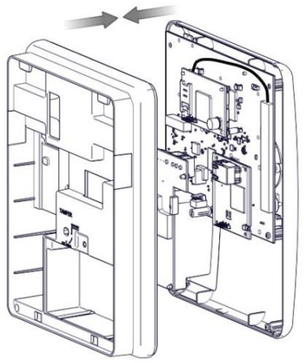

Step 7

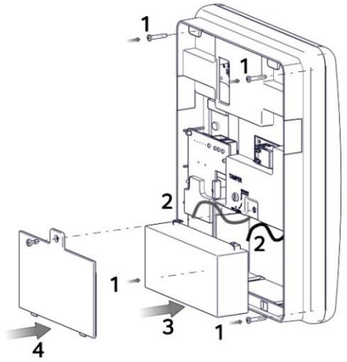

Step 8

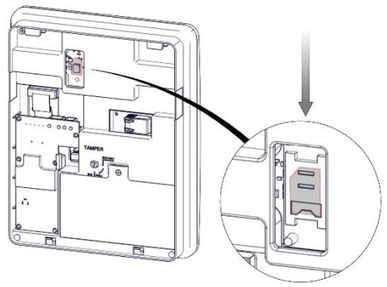

Step 9

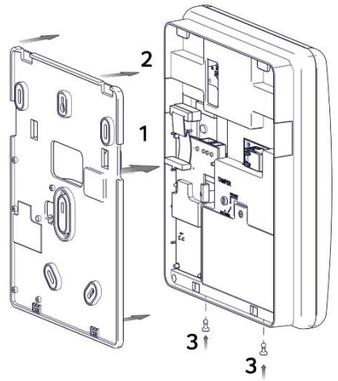

Step 10

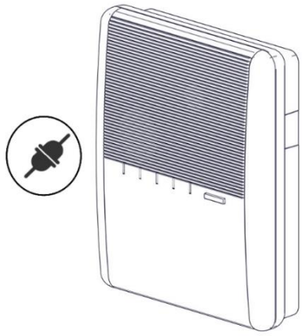

LightSYS

Step 1

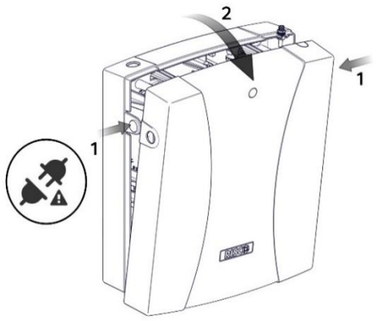

Step 2

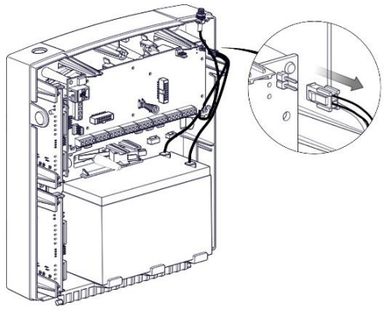

Step 3

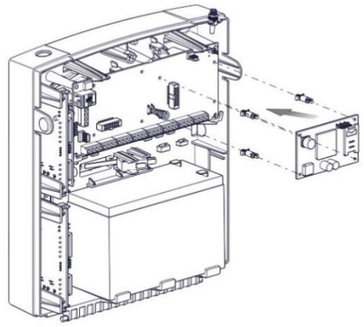

Step 4

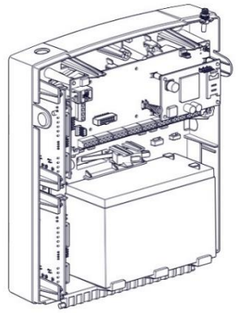

Step 5

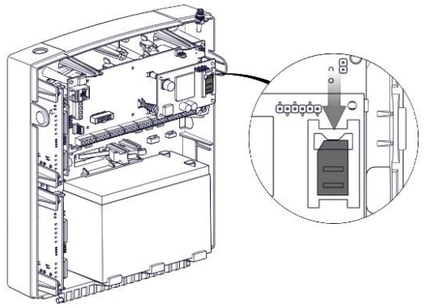

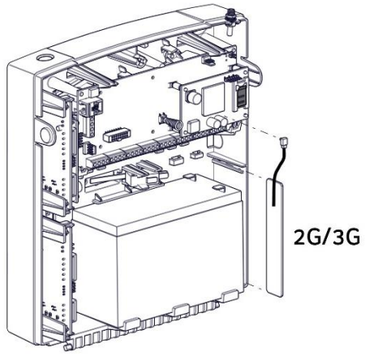

OR

Step 6

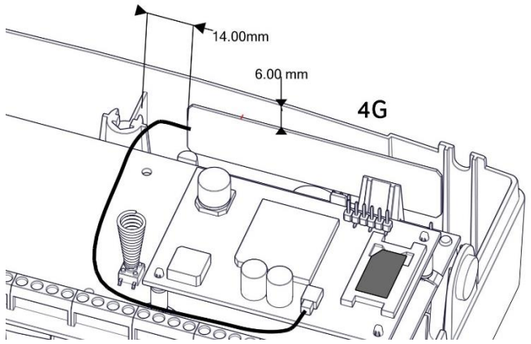

OR

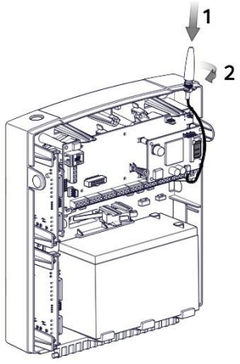

Step 7

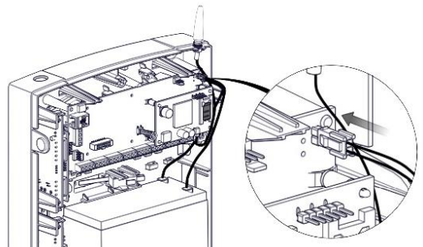

Step 8

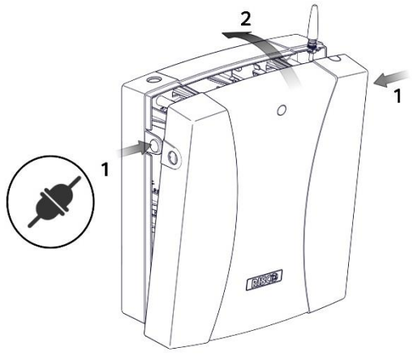

ProSYS Plus (Metal Box)

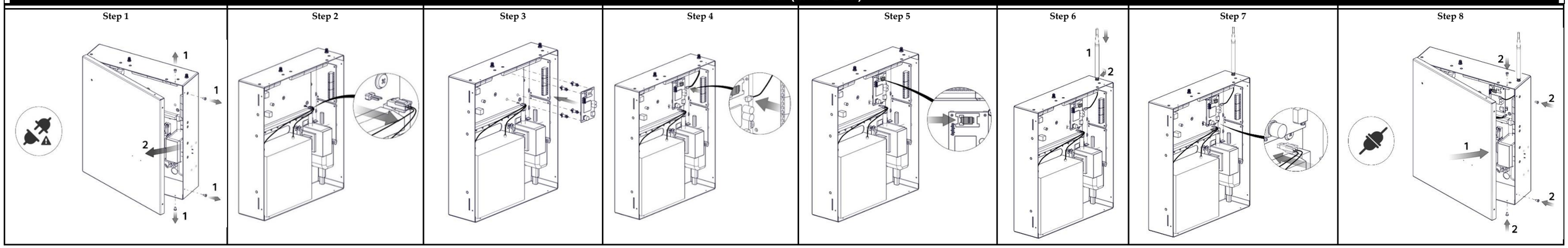

ProSYS Plus (Plastic Box)

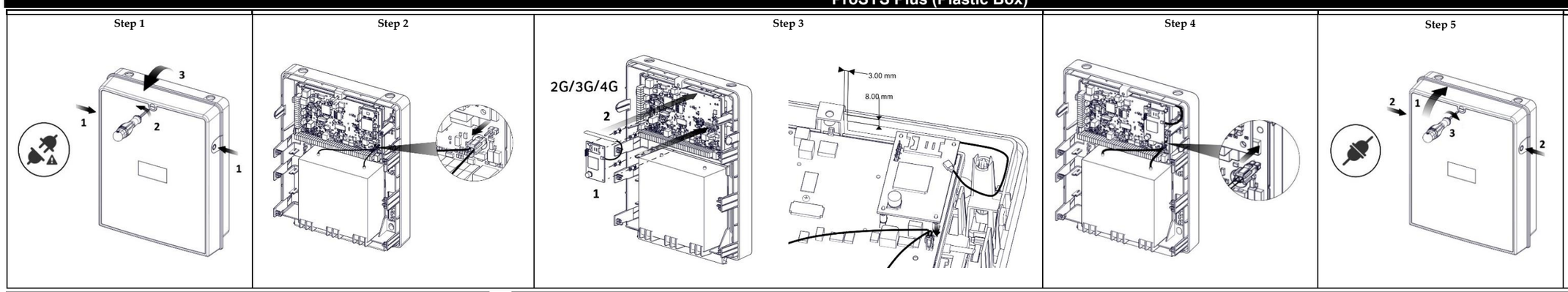

RED Compliance Statement:
Hereby, RISCO Group declares that this equipment is in compliance with the essential requirements and other relevant provisions of Directive 2014/53/EU. For the CE Declaration of Conformity please refer to our website: www.riscogroup.com.

Dichiarazione di Conformità RED:
La sottoscritta RISCO Group, dichiara sotto la propria responsabilità che questo prodotto è conforme ai requisiti essenziali e alle altre rilevanti disposizioni della Direttiva Europea 2014/53/EU.
Per le Dichiarazioni di Conformità CE, visitate il nostro sito web: www.riscogroup.com.

Declaración de Conformidad RED :
Por la presente, RISCO Group declara que este equipo cumple con los requisitos esenciales y otras disposiciones relevantes de la Directiva 2014/53/EU. Para la Declaración de Conformidad CE, por favor dirijase a nuestra web: www.riscogroup.comc

Rapport de Conformité de RED:
Par la présente, RISCO Group, déclare cet équipement est en conformité aux conditions essentielles et à d'autres dispositions appropriées de la directive 2014/53/EU. Vous pouvez trouver la copie complète de la déclaration de conformité à la directive 2014/53/EU sur notre site web, à l'adresse suivante : www.riscogroup.com

Declaração de conformidade RED:
Por meio deste, o RISCO Group declara que o seu equipamento está em conformidade com as necessidades essenciais e outras provisões relevantes da diretiva 2014/53/EU. l Para ver a declaração de conformidade CE, por favor consulte o nosso website: www.riscogroup.com

RED Compliance Statement:
RISCO Group bevestigt dat dit product in lijn is met de essentiële verplichtingen en andere belangrijke voorzieningen van de 2014/53/EU richtlijnen. Voor de conformiteitsverklaring zie onze website: www.riscogroup.com

RCM Statement: The Equipment complies with the regulation requirements of Australia and New Zeeland.

Technical Specifications

Parameter / Parametro / Parámetro / Paramètre / Parâmetro / Parameter	Description / Descrizione / Descrição / Description / Descripción / Beschrijving
EN: Current Consumption (standby) **IT:** Assorbimento in corrente (a riposo) **ES:** Consumo de corriente (reposo) **FR:** Consommation de courant (en veille) **PR:** Consumo de corrente (standby) **NL:** Stroomverbruik (stand by)	**Agility:** 35 mA **LightSYS/ProSYS Plus:** 30 mA
EN: Maximum Current Consumption **IT:** Assorbimento massimo di corrente **ES:** Consumo de corriente máximo **FR:** Consommation de courant maximale **PR:** Máximo consumo de corrente **NL:** Maximum stroomverbruik	**Agility:** 300 mA **LightSYS:** 160 mA **ProSYS Plus:** 130 mA
EN: Operating temperature **IT:** Temp. di funzionamento **ES:** Temperatura de Operación **FR:** Température de fonctionnement **PR:** Temperatura de funcionamento **NL:** Bedrijfstemperatuur	-10°C to 55°C (14°F to 131°F)
EN: Storage temperature: **IT:** Temp. di stoccaggio **ES:** Temperatura de almacenamiento: **FR:** Température de stockage **PR:** Temperatura de armazenamento **NL:** Opslag Temperatuur	-20°C to 60°C (-4°F to 140°F)
EN: Average Relative Humidity **IT:** Umidità relativa media **ES:** Humedad relativa promedio: **FR:** Humidité relative moyenne **PR:** Húmidade média relativa **NL:** Gemiddelde relatieve vochtigheid	75% approx.
EN: Dimensions (W x H): **IT:** Dimensioni (H x L x P) **ES:** Tamaño (Al x An): **FR:** Dimensions (L x l x H) **PR:** Tamanho **NL:** Afmetingen (LxWxD):	80 x 50 x 25 mm (3.1 x 2 x 1")

Ordering information/ Codici prodotto/Informações para pedidos/ Réference produit/Información sobre pedidos/Bestel referentie

P/N	Description / Descrizione / Descrição / Description / Descripción / Beschrijving	RP512G2 And RP512G3 Certification	
RW132G20000A, RW132G30000A, RW132G40000A, RW132G400AUA	**EN:** GSM 2G/3G/4G MSoc + Ant. Plastic box **IT:** Moduli GSM 2G/3G/4G Multi-socket + Antenna per contenitore in policarbonato **ES:** GSM 2G/3G/4G MSoc + Ant. Caja plastic **FR:** Module 2G/3G/4G Multisocket + Antenne pour boîtier plastique **PR:** GSM 2G/3G/4G MSoc + Ant. Caixa plást. **NL:** GSM 2G/3G/4G MSoc + Ant. Plastic box	**LightSYS (RP512G2, RP512G3):** EN50131 Grade 2 Environmental Class II,EN50131-10 SPT Type Z EN50136-1, EN50136-2 Comments: 1. Alarm transmission System classification (per EN50131-1): ATS 5 2. ATS Category (per EN50136-1): Category C (to be used in parallel with IP and PSTN SPT/transmission paths) 3. Compatibility with Serial interface with AS. 4. Compatibility with GPRS and TCP/IP protocols. 5. Method of operation: Pass-through	**Agility(RP512G2,RP512G3):** EN50131 Grade 2 Environmental Class II, RTC 50131-10, EN50131-10 SPT Type Z EN50136-1, EN50136-2 Comments: 1.ATS Category: GSM:SP4 GSM Primary and IP Secondary -DP3 IP Primary and GSM Secondary -DP3 2. Compatibility with Serial interface with AS. 3. Compatibility with GPRS and TCP/IP protocols. 4. Method of operation:Pass-through
RP512G20000A, RP512G30000A, RP512G40000A, RP512G400AUA	**EN:** GSM 2G/3G/4G Modules for ProSYS™Plus **IT:** Moduli GSM 2G/3G/4G per ProSYS™Plus **ES:** Módulos 2G/3G/4G GSM para ProSYS™Plus **FR:** Modules GSM 2G/3G/4G pour ProSYS™Plus **PR:** Módulo GSM 2G/3G/4G da ProSYS™Plus **NL:** GSM 2G/3G/4G Modules voor ProSYS™Plus	EN50131 Grade 3 Environmental Class II, EN50131-10 SPT Type Z EN50136-1, EN50136-2 Comments: 1. Alarm transmission System classification (per EN50131-1): ATS6 2. ATS Category (per EN50136-1): Category C (to be used in parallel with IP and PSTN SPT/transmission paths) 3. Compatibility with Serial interface with AS. 4. Compatibility with GPRS and TCP/IP protocols. 5. Method of operation: Pass-through	

Standard Limited Product Warranty ("Limited Warranty")

RISCO Ltd. ("**RISCO**") guarantee RISCO's hardware products ("**Products**") to be free from defects in materials and workmanship when used and stored under normal conditions and in accordance with the instructions for use supplied by RISCO, for a period of (i) 24 months from the date of delivery of the Product (the "**Warranty Period**"). This Limited Warranty covers the Product only within the country where the Product was originally purchased and only covers Products purchased as new.

Contact with customers only. This Limited Warranty is solely for the benefit of customers who purchased the Products directly from RISCO or from an authorized distributor of RISCO. RISCO does not warrant the Product to consumers and nothing in this Warranty obligates RISCO to accept Product returns directly from end users who purchased the Products for their own use from RISCO's customer or from any installer of RISCO, or otherwise provide warranty or other services to any such end user directly. RISCO's authorized distributor or installer shall handle all interactions with its end users in connection with this Limited Warranty. RISCO's authorized distributor or installer shall make no warranties, representations, guarantees or statements to its end users or other third parties that suggest that RISCO has any warranty or service obligation to, or any contractual privy with, any recipient of a Product.

Remedies. In the event that a material defect in a Product is discovered and reported to RISCO during the Warranty Period, RISCO shall accept return of the defective Product in accordance with the below RMA procedure and, at its option, either (i) repair or have repaired the defective Product, or (ii) provide a replacement product to the customer.

Return Material Authorization. In the event that you need to return your Product for repair or replacement, RISCO will provide you with a Return Merchandise Authorization Number (RMA#) as well as return instructions. Do not return your Product without prior approval from RISCO. Any Product returned without a valid, unique RMA# will be refused and returned to the sender at the sender's expense. The returned Product must be accompanied with a detailed description of the defect discovered ("**Defect Description**") and must otherwise follow RISCO's then-current RMA procedure published in RISCO's website at www.riscogroup.com in connection with any such return. If RISCO determines in its reasonable discretion that any Product returned by customer conforms to the applicable warranty ("**Non-Defective Product**"), RISCO will notify the customer of such determination and will return the applicable Product to customer at customer's expense. In addition, RISCO may propose and assess customer a charge for testing and examination of Non-Defective Product.

Entire Liability. The repair or replacement of Products in accordance with this Limited Warranty shall be RISCO's entire liability and customer's sole and exclusive remedy in case a material defect in a Product is discovered and reported as required herein. RISCO's obligation and this Limited Warranty are contingent upon the full payment by customer for such Product and upon a proven weekly testing and examination of the Product functionality.

Limitations. This Limited Warranty is the only warranty made by RISCO with respect to the Products. The warranty is not transferable to any third party. To the maximum extent permitted by applicable law, this Limited Warranty shall not apply and will be void if: (i) the conditions set forth above are not met (including, but not limited to, full payment by customer for the Product and a proven weekly testing and examination of the Product functionality); (ii) if the Products or any part or component thereof: (a) have been subjected to improper operation or installation; (b) have been subject to neglect, abuse, willful damage, abnormal working conditions, failure to follow RISCO's instructions (whether oral or in writing); (c) have been misused, altered, modified or repaired without RISCO's written approval or combined with, or installed on products, or equipment of the customer or of any third party; (d) have been damaged by any factor beyond RISCO's reasonable control such as, but not limited to, power failure, electric power surges, or unsuitable third party components and the interaction of software therewith or (e) any failure or delay in the performance of the Product attributable to any means of communication provided by any third party service provider, including, but not limited to, GSM interruptions, lack of or internet outage and/or telephony failure. BATTERIES ARE EXPLICITLY EXCLUDED FROM THE WARRANTY AND RISCO SHALL NOT BE HELD RESPONSIBLE OR LIABLE IN RELATION THERETO, AND THE ONLY WARRANTY APPLICABLE THERETO, IF ANY, IS THE BATTERY MANUFACTURER'S WARRANTY. RISCO does not install or integrate the Product in the end user's security system and is therefore not responsible for and cannot guarantee the performance of the end user's security system which uses the Product or which the Product is a component of.

This Limited Warranty applies only to Products manufactured by or for RISCO. Further, this Limited Warranty does not apply to any software (including operating system) added to or provided with the Products or any third-party software, even if packaged or sold with the RISCO Product. Manufacturers, suppliers, or third parties other than RISCO may provide their own warranties, but RISCO, to the extent permitted by law and except as otherwise specifically set forth herein, provides its Products "AS IS". Software and applications distributed or made available by RISCO in conjunction with the Product (with or without the RISCO brand), including, but not limited to system software, as well as P2P services or any other service made available by RISCO in relation to the Product, are not covered under this Limited Warranty. Refer to the Terms of Service at: www.riscogroup.com/warranty for details of your rights and obligations with respect to the use of such applications, software or any service. RISCO does not represent that the Product may not be compromised or circumvented; that the Product will prevent any personal injury or property loss by burglary, robbery, fire or otherwise, or that the Product will in all cases provide adequate warning or protection. A properly installed and maintained alarm may only reduce the risk of a burglary, robbery or fire without warning, but it is not insurance or a guarantee that such will not occur or will not cause or lead to personal injury or property loss. CONSEQUENTLY, RISCO SHALL HAVE NO LIABILITY FOR ANY PERSONAL INJURY, PROPERTY DAMAGE OR OTHER LOSS BASED ON ANY CLAIM AT ALL INCLUDING A CLAIM THAT THE PRODUCT FAILED TO GIVE WARNING.

EXCEPT FOR THE WARRANTIES SET FORTH HEREIN, RISCO AND ITS LICENSORS HEREBY DISCLAIM ALL EXPRESS, IMPLIED OR STATUTORY, REPRESENTATIONS, WARRANTIES, GUARANTEES, AND CONDITIONS WITH REGARD TO THE PRODUCTS, INCLUDING BUT NOT LIMITED TO ANY REPRESENTATIONS, WARRANTIES, GUARANTEES, AND CONDITIONS OF MERCHANTABILITY, FITNESS FOR A PARTICULAR PURPOSE, TITLE AND WARRANTIES AGAINST HIDDEN OR LATENT DEFECTS, TO THE EXTENT PERMITTED BY LAW. WITHOUT LIMITING THE GENERALITY OF THE FOREGOING, RISCO AND ITS LICENSORS DO NOT REPRESENT OR WARRANT THAT: (i) THE OPERATION OR USE OF THE PRODUCT WILL BE TIMELY, SECURE, UNINTERRUPTED OR ERROR-FREE; (ii) THAT ANY FILES, CONTENT OR INFORMATION OF ANY KIND THAT MAY BE ACCESSED THROUGH THE PRODUCT SHALL REMAIN SECURED OR NON DAMAGED. CUSTOMER ACKNOWLEDGES THAT NEITHER RISCO NOR ITS LICENSORS CONTROL THE TRANSFER OF DATA OVER COMMUNICATIONS FACILITIES, INCLUDING THE INTERNET, GSM OR OTHER MEANS OF COMMUNICATIONS AND THAT RISCO'S PRODUCTS, MAY BE SUBJECT TO LIMITATIONS, DELAYS, AND OTHER PROBLEMS INHERENT IN THE USE OF SUCH MEANS OF COMMUNICATIONS. RISCO IS NOT RESPONSIBLE FOR ANY DELAYS, DELIVERY FAILURES, OR OTHER DAMAGE RESULTING FROM SUCH PROBLEMS. RISCO WARRANTS THAT ITS PRODUCTS DO NOT, TO THE BEST OF ITS KNOWLEDGE, INFRINGE UPON ANY PATENT, COPYRIGHT, TRADEMARK, TRADE SECRET OR OTHER INTELLECTUAL PROPERTY RIGHT IN ANY EVENT RISCO SHALL NOT BE LIABLE FOR ANY AMOUNTS REPRESENTING LOST REVENUES OR PROFITS, PUNITIVE DAMAGES, OR FOR ANY OTHER INDIRECT, SPECIAL, INCIDENTAL, OR CONSEQUENTIAL DAMAGES, EVEN IF THEY WERE FORESEEABLE OR RISCO HAS BEEN INFORMED OF THEIR POTENTIAL.

© RISCO Group 10/2020 5IN2826 D